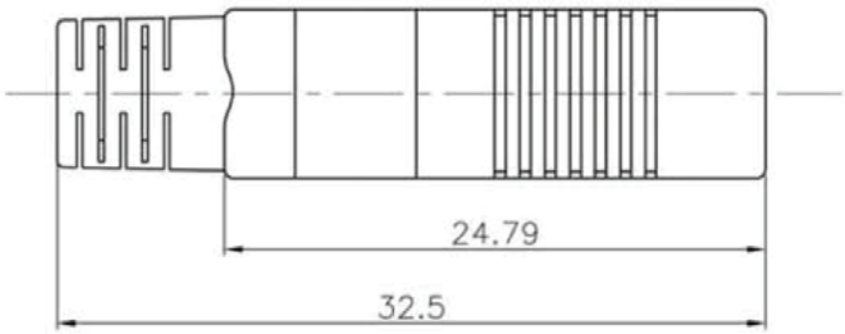


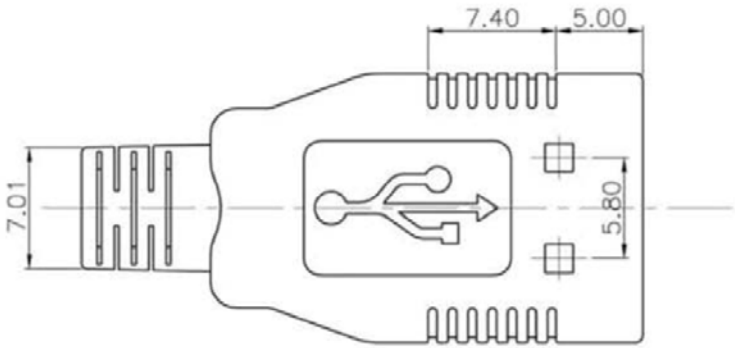


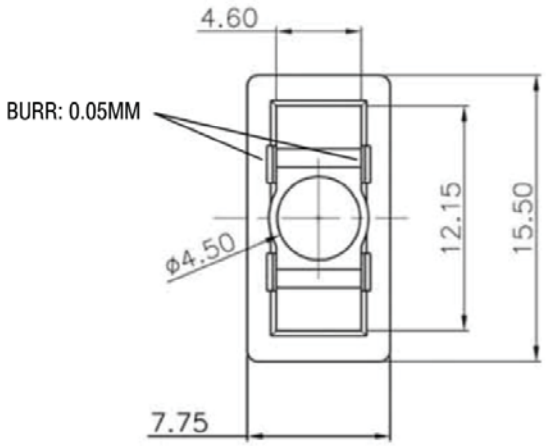


**Materials:**

- Material: PVC
- Color: Black

RoHS Complaint

| | | | | | | | | |
|---|---|---|---|---|---|---|---|---|
| Scale | 1:1 | | | | | | | Name |
| TOLERANCE | | | | | | Drawn | 10.19.11 | Chappell |
| X.X | ±0.40 | | | | | Approved | | |
| X.XX | ±0.25 | | | | | | | |
| X.XXX | ±0.15 | | | | | | | |
| Angle | ±3° | | | | | | | |
| | | | Modification | Date | Name | | | |

ASSMANN WSW components

Item No.
**A-USBPA-HOOD-BLK**

Title
Hoods USB-Assembly, Type A, Male, Black

Drawing No.

**rev00**

Replace

Sheet