SHEET OF

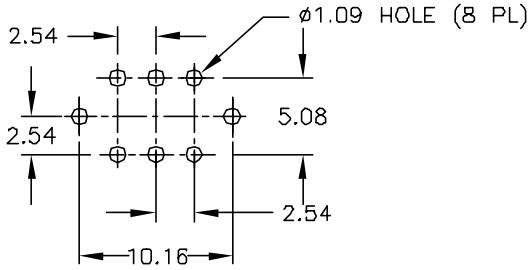

RECOMMENDED P.C.B. LAYOUT

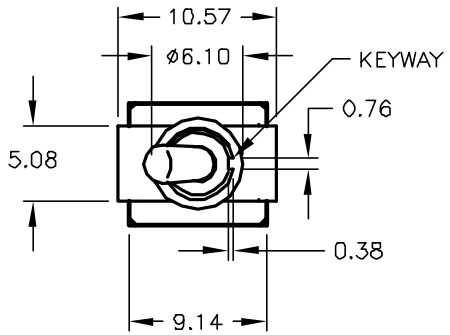

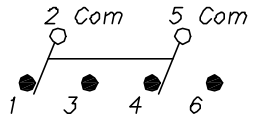

CIRCUIT: DPDT

SWITCH FUNCTION		
POS. 1	POS. 2	POS. 3
ON	NONE	ON
2-3,5-6	OPEN	2-1,5-4

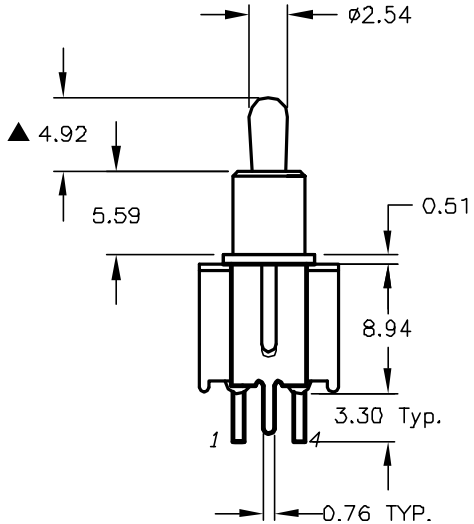

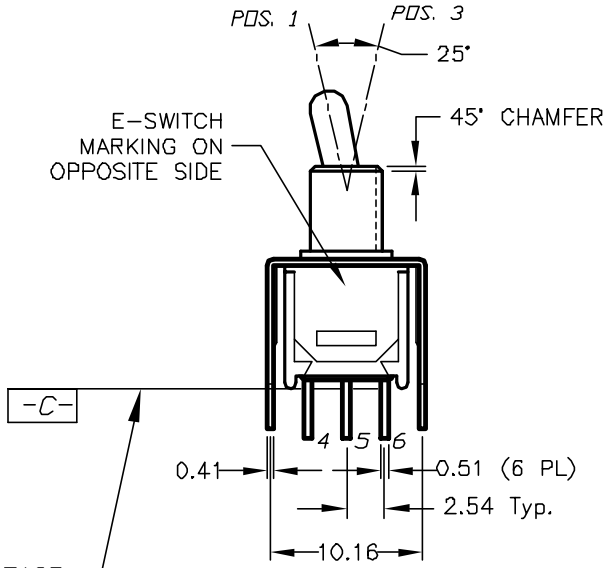

NOTES:

1. ALL DIMENSIONS IN MM
2. GENERAL TOLERANCE: X.X=±0.4
   X.XX=±0.25
3. TERM. NOS. FOR REF. ONLY
4. CONTACT RATING: 3A @120VAC or 28VDC,
   1A @250VAC
5. FIXED TERMINAL & MOVING CONTACT: Cu alloy w/Silver plate
6. CONTACT RESISTANCE: 20mILLI OHMS max. Initial
   @2-4VDC 100mA for Au and Ag
7. ELECTRIC LIFE: 30,000 make-and-break cycles
   at full load.
8. INSULATION RESISTANCE: 1,000 M ohm min.
9. DIELECTRIC STRENGTH: 1,000 V RMS @sea level.
10. OPERATING TEMP.: -30°C to 85°C

REV.	ECN No.	DESCRIPTION	DATE	CHKD
A	12881	RELEASED FOR PRODUCTION	3/4/03	CJB

THE INFORMATION CONTAINED IN THIS DOCUMENT IS PROPRIETARY TO E-SWITCH AND IS NOT TO BE COPIED OR TRANSFERRED

E-SWITCH®

TITLE 200 MDP-1 T2 B4 VS2 Q E

SCALE	DATE	DR	DWG	REV
2:1	3/4/03	CJB	T221102	A